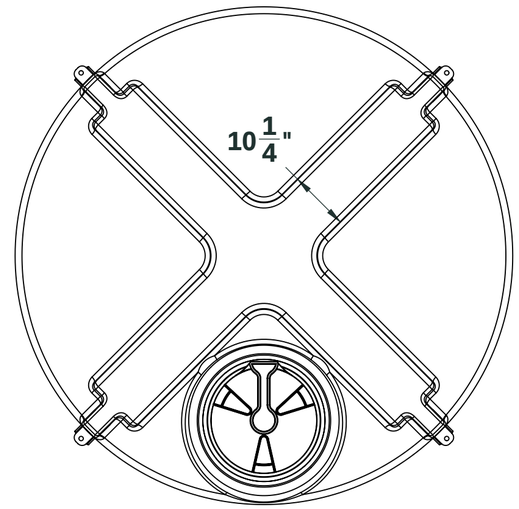

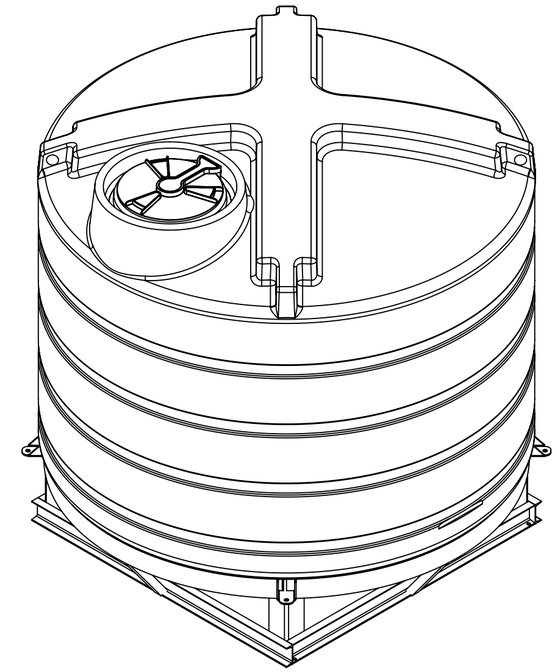

Shown with AZFC01350LP stand

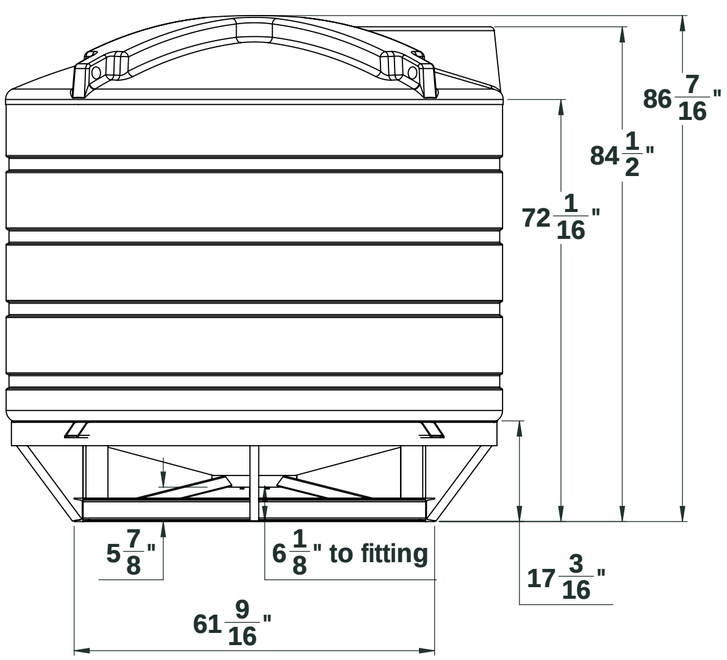

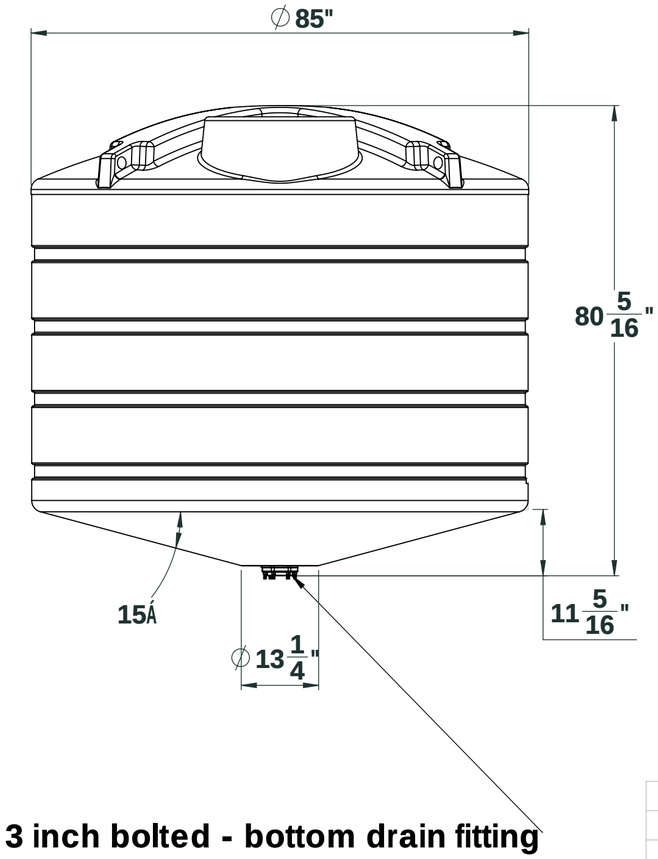

3 inch bolted - bottom drain fitting

NOTE: Allow +/- 1.5% Shrinkage

PROPRIETARY AND CONFIDENTIAL

THE INFORMATION CONTAINED IN THIS DRAWING IS THE SOLE PROPERTY OF **ENDURAPLAS LLC**. ANY REPRODUCTION IN PART OR AS A WHOLE WITHOUT THE WRITTEN PERMISSION OF **ENDURAPLAS LLC** IS PROHIBITED.

NEXT ASSY	USED ON
APPLICATION	

UNLESS OTHERWISE SPECIFIED:

DIMENSIONS ARE IN INCHES
TOLERANCES:
FRACTIONAL ±
ANGULAR: MACH ± BEND ±
TWO PLACE DECIMAL ±
THREE PLACE DECIMAL ±

INTERPRET GEOMETRIC TOLERANCING PER:

MATERIAL

FINISH

DO NOT SCALE DRAWING

	NAME	DATE
DRAWN	DNS	11/2/16
CHECKED		
ENG APPR.		
MFG APPR.		
Q.A.		

COMMENTS:

ENDURAPLAS LLC

TITLE:

THC01350

SIZE	DWG. NO.	REV
C		1

SCALE: 1:50 WEIGHT: SHEET 1 OF 1